HARRIS SEMICONDUCTOR

HI-565A

August 1997

Complete Data Sheet available via web, Harris' home page: http://www.semi.harris.com or via Harris AnswerFAX, see Section 17

High Speed, Monolithic D/A Converter with Reference

Features

- 12-Bit DAC and Reference on a Single Chip
- Pin Compatible With AD565A
- Very High Speed: Settles to ±0.5 LSB in 250ns (Max) Full Scale Switching Time 30ns (Typ)
- Guaranteed For Operation With ±12V Supplies
- Monotonicity Guaranteed Over Temperature
- Nonlinearity Guaranteed Over Temp (Max) . . ±0.5 LSB
- Low Gain Drift (Max, DAC Plus Ref) . . . . . 25ppm/°C
- Low Power Dissipation 250mW

Applications

- CRT Displays
- High Speed A/D Converters
- Signal Reconstruction
- Waveform Synthesis

Description

The HI-565A is a fast, 12-bit, current output, digital-to-analog converter. The monolithic chip includes a precision voltage reference, thin-film R2R ladder, reference control amplifier and twelve high speed bipolar current switches.

The Harris dielectric isolation process provides latch free operation while minimizing stray capacitance and leakage currents, to produce an excellent combination of speed and accuracy. Also, ground currents are minimized to produce a low and constant current through the ground terminal, which reduces error due to code dependent ground currents.

HI-565A dice are laser trimmed for a maximum integral non-linearity error of ±0.5 LSB at 25°C. In addition, the low noise buried zener reference is trimmed both for absolute value and temperature coefficient. Power dissipation is typically 250mW, with ±15V supplies.

The HI-565A is offered in both commercial and military grades. See Ordering Information.

Ordering Information

PART NUMBER	LINEARITY (INL)	LINEARITY (DNL)	TEMP. RANGE (°C)	PACKAGE	PKG. NO.
HI1-565AJD-5	0.50 LSB	0.75 LSB	0 to 75	24 Ld SBDIP	D24.6
HI1-565AKD-5	0.25 LSB	0.50 LSB	0 to 75	24 Ld SBDIP	D24.6
HI1-565ASD-2	0.50 LSB	0.75 LSB	-55 to 125	24 Ld SBDIP	D24.6
HI1-565ATD-2	0.25 LSB	0.50 LSB	-55 to 125	24 Ld SBDIP	D24.6
HI1-565ASD/883	0.50 LSB	0.50 LSB	-55 to 125	24 Ld SBDIP	D24.6
HI1-565ATD/883	0.25 LSB	0.50 LSB	-55 to 125	24 Ld SBDIP	D24.6

Pinout

HI-565A (SBDIP)
TOP VIEW

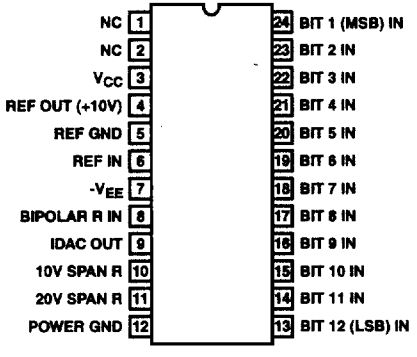

Functional Diagram

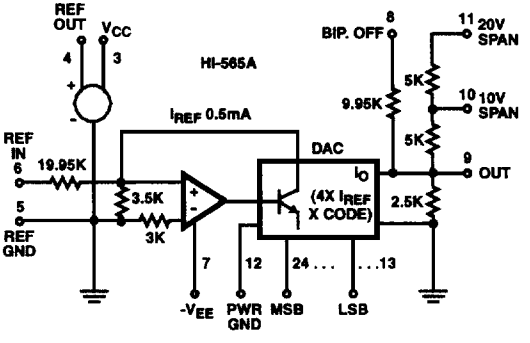

CAUTION: These devices are sensitive to electrostatic discharge. Users should follow proper IC Handling Procedures.

Copyright © Harris Corporation 1997

File Number 3109.1