MC317

Level translator intended for converting non-saturated MECL signal levels to saturated logic levels; provides "OR" or "NOR" logic depending on the bias arrangement used.

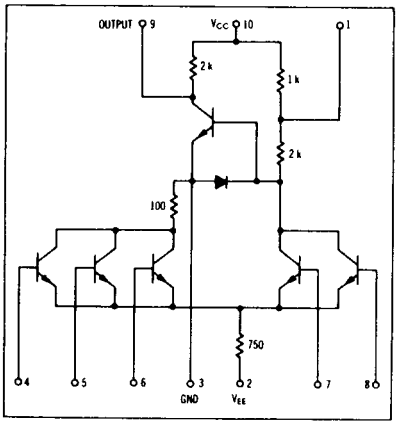

SWITCHING TEST CIRCUIT AND WAVEFORMS

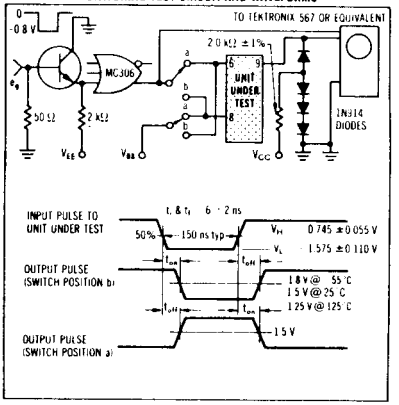

ELECTRICAL CHARACTERISTICS

	Test Conditions						
	Vdc ± 1%						mAdc
@ Test Temperature −55°C	—	−0.945	−1.450	−5.20	−1.25	+6.0	10
@ Test Temperature +25°C	−0.690	−0.795	−1.350	−5.20	−1.15	+6.0	10
@ Test Temperature +125°C	—	−0.655	−1.300	−5.20	−1.00	+6.0	10

Characteristic	V_H Pin No	$V_{I\,max}$ Pin No	V_L Pin No	V_{BB} Pin No	V_{BB} Pin No	V_{CC} Pin No	I_L Pin No	Ground Pin No	Symbol Pin No in ( )	Test Limits −55°C Min	−55°C Max	+25°C Min	+25°C Max	+125°C Min	+125°C Max	Unit
Power Supply Drain Current	—	6	—	2,4,5,7	8	10	—	3	I_C (10)	—	7.0	—	7.0	—	6.8	mAdc
	—	—	—	2,4,5,6,7	8	10	—	3	I_B (2)	—	7.0	—	7.0	—	6.8	mAdc
Input Current	4	—	—	2,5,6,7	8	10	—	3	I_{in} (4)	—	—	—	200	—	—	μAdc
	5	—	—	2,4,6,7	8	10	—	3	I_{in} (5)	—	—	—	↓	—	—	↓
	6	—	—	2,4,5,7	8	10	—	3	I_{in} (6)	—	—	—	↓	—	—	↓
	7	—	—	2,4,5,6	8	10	—	3	I_{in} (7)	—	—	—	↓	—	—	↓
	8	—	—	2,4,5,7	6	10	—	3	I_{in} (8)	—	—	—	↓	—	—	↓
Output Voltage, High	—	—	—	2,4,5,6,7	8	10	—	3	V_{OH} (9)	—	—	5.8	—	—	—	Vdc
	—	—	—	2,4,5,6,8	7	10	—	3	V_{OH} (9)	—	—	5.8	—	—	—	Vdc
Output Voltage, Low	—	4	—	2,5,6,7	8	10	9	3	V_{OL} (9)	—	0.45	—	0.45	—	0.50	Vdc
	—	5	—	2,4,6,7	8	10	9	3	V_{OL} (9)	—	↓	—	↓	—	↓	↓
	—	6	—	2,4,5,7	8	10	9	3	V_{OL} (9)	—	↓	—	↓	—	↓	↓
	—	6	—	2,4,5,8	7	10	9	3	V_{OL} (9)	—	↓	—	↓	—	↓	↓
Switching Times	Pulse In	Pulse Out								Typ	Max	Typ	Max	Typ	Max	
Turn-On Time	6	9	—	2,4,5,7	8	10	—	3	t_{on}	27.5	40.0	27.5	35.0	29.5	35.0	ns
	8	9	—	2,4,5,7	6	10	—	3	t_{on}	27.5	40.0	27.5	35.0	29.5	35.0	↓
Turn-Off Time	6	9	—	2,4,5,7	8	10	—	3	t_{off}	25.0	40.0	26.0	35.0	27.0	40.0	↓
	8	9	—	2,4,5,7	6	10	—	3	t_{off}	25.0	40.0	26.0	35.0	27.0	40.0	↓